2-80-320-16572

05-228/C

CAUTION THE INFORMATION ON THIS DOCUMENT IS THE PROPERTY OF BHARAT HEAVY ELECTRICALS LTD. IT MUST NOT BE USED DIRECTLY OR INDIRECTLY IN ANY WAY DETRIMENTAL TO THE INTEREST OF THE COMPANY.

ALL DIMENSIONS ARE IN MILLIMETRES

NOTES :-

01. DESIGN PRESSURE : 73.5 kg/sq.cm.(g)
02. DESIGN TEMPERATURE : 375° C
03. ALL DIMENSIONS ARE FINISHED DIMENSIONS.
04. MANUFACTURING, INSPECTION AND TESTING SHALL BE AS PER IBR, ASME B16.9 AND SA234.
05. FITTING TO COMPLY WITH ASME B16.9 AND DIMENSIONS AND TOLERANCES ARE AS PER THIS DRAWING.
06. MATERIAL SPECIFICATION SHALL BE SA105(A)
07. FOLLOW APPLICABLE QP & TDG(LATEST VERSION) FOR THE PROJECT
08. WEIGHT GIVEN IN BOM IS INDICATIVE ONLY.
09. CONNECTING PIPE SIZE -OD965X40/OD762X30-SA106GRC

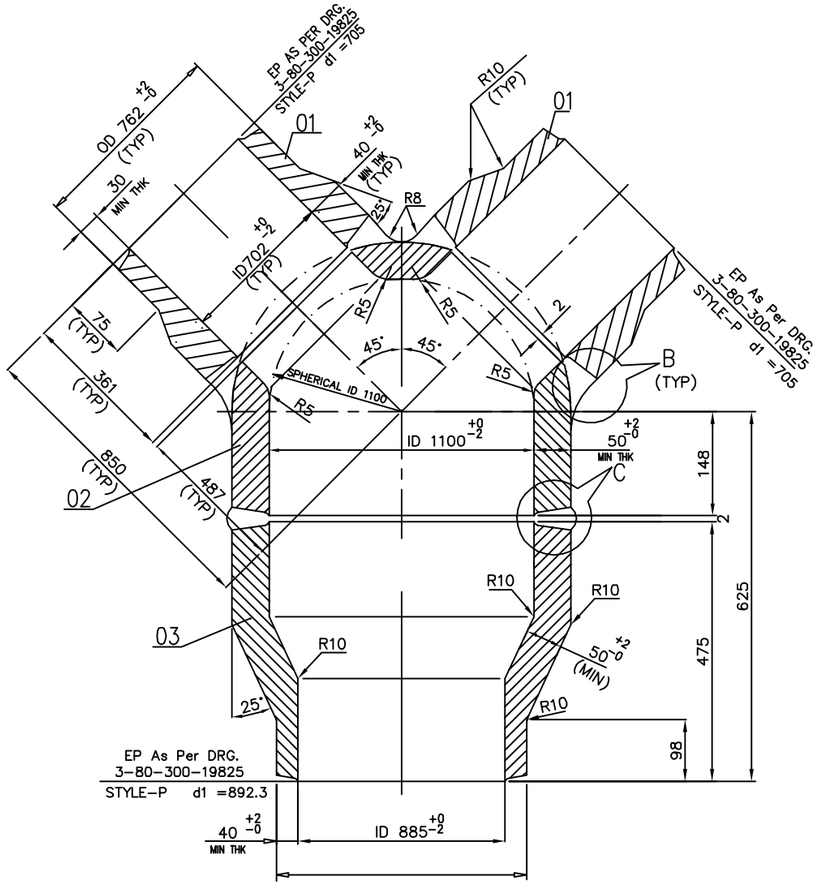

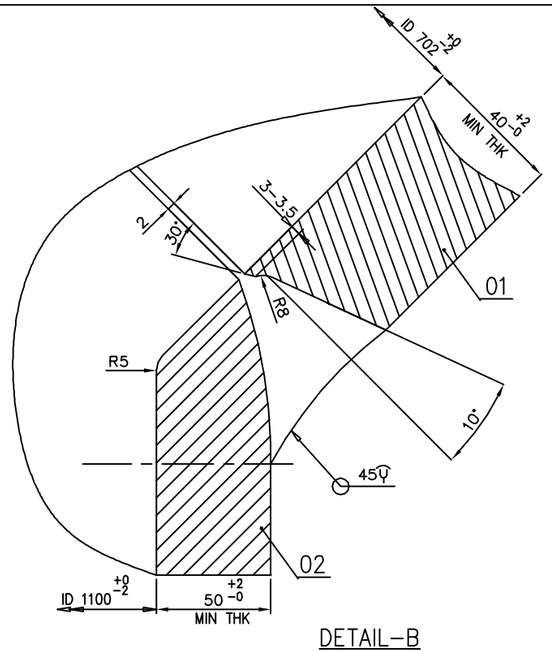

DETAIL-B

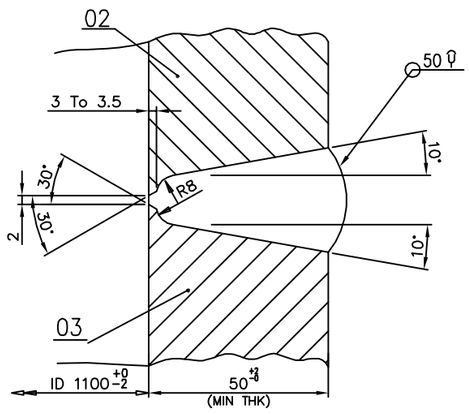

DETAIL-C

REV	DATE	ALTD :
01		APPD :

VAR NO	ITEM NO	DESCRIPTION	DRAWING NO	MATERIAL CODE	A	UNIT WEIGHT	
				MATERIAL SPECN	C	QUANTITY	
	03	OUTLET FORGING ID1100 x THK50 MIN / ID885 x THK 40 MIN	4-80-320-83894	99 516 892 0000 / SA 105	A	610 000	1
	02	BODY FORGING ID 1100 x THK 50 MIN	4-80-320-83893	99 516 891 0000 / SA 105	A	670 000	1
	01	INLET FORGING ID 702 x THK 40 MIN	4-80-320-83892	99 516 890 0000 / SA 105	A	260 000	2

JOB NO.					REL NO.		DATE	

TYPE OF PRODUCT OR NAME OF CUSTOMER/PROJECT

BHARAT HEAVY ELECTRICALS LTD., PIPING CENTRE, CHENNAI 600 017

	NAME	SIGN	DATE	NO OF ITEMS
DRN	BISWA		01.12.19	
CHD	E.PYRIA		01.12.19	
APPD	SARAVANAN		01.12.19	

DEPT.	GRADE OF UN TOL DIM	SCALE	WEIGHT (Kg).	BHEL PO REF. NO.	ITEM No.
CODE	C/M/F	N.T.S.	~1800		

TITLE	CARD CODE	MSE DRAWING NO.	REV
FABRICATED Y-PIECE (OD965x40/OD762x30	U 01	2-80-320-16572	00

SIZE A2